30W 2"x1" Package DC-DC Regulated Converter SKM30-N & DKM30-N series

Automate Industrial Security Network Telecom

Features

- DIP 2"x1" package with industry standard pinout
- 4:1 ultrawide input range
- Operating temperature range -40 ~ +90℃ (-40 ~ +60℃ no derating)
- No minimum load required
- Comply to BS EN/EN55032 radiated Class A without additional components
- High efficiency up to 89%
- Protections: Short circuit (Continuous) / Overload / Over voltage
- 3KVDC I/O isolation
- Remote ON/OFF control and Triming output (±10%)
- 3 years warranty

Applications

- Telecom/datacom system
- Wireless network
- Industrial control facility
- Instrument
- Analyzer
- Detector
- Data switch

GTIN CODE

MW Search: https://www.meanwell.com/serviceGTIN.aspx

Description

SKM30-N and DKM30-N series are 30W isolated and regulated module type DC-DC converter with DIP 2"x1" package. It features international standard pins, a high efficiency up to 89%, wide working temperature range -40~+90℃ , 3KVDC I/P-O/P isolation voltage, compliance to BS EN/EN55032 radiated Class A without additional components, continuous-mode short circuit, overload, over voltage protection, remote ON/OFF and trimmable output voltage etc. The models account for different input voltage 9~36V and 18~75V 4:1 ultrawide input range, and various output voltage, 5V/12V/15V for single output and ±12V/±15V for dual outputs, which are suitable for all kinds of systems, Such as industrial control, telecommunication field, distributed power architecture, and so on.

Model Encoding

S KM 30 F – 12 N

- N: NEW Series
- 12: Output voltage (5/12/15Vdc，±12/±15Vdc)
- F: Input voltage (F: 9~36Vdc，G: 18~75Vdc)
- 30: Rated wattage
- S: Series name { S:Single output / D:Dual output

MODEL SELECTION TABLE

ORDER NO.	INPUT			OUTPUT		EFFICIENCY (TYP.)	CAPACITOR LOAD (MAX.)
	INPUT VOLTAGE (RANGE)	INPUT CURRENT		OUTPUT VOLTAGE	OUTPUT CURRENT		
		NO LOAD	FULL LOAD				
SKM30F-05N	Nominal 12V, 24V (9 ~ 36V)	120mA	2941mA	5V	0~6000mA	85%	820μF
SKM30F-12N		30mA	2907mA	12V	0~2500mA	87%	330μF
SKM30F-15N		30mA	2874mA	15V	0~2000mA	87.5%	220μF
DKM30F-12N		28mA	2850mA	±12V	±0~1250mA	87%	*150μF
DKM30F-15N		38mA	2800mA	±15V	±0~1000mA	88%	*100μF
SKM30G-05N	Nominal 24V, 48V (18 ~ 75V)	100mA	1453mA	5V	0~6000mA	86%	820μF
SKM30G-12N		25mA	1437mA	12V	0~2500mA	87.5%	330μF
SKM30G-15N		25mA	1420mA	15V	0~2000mA	88.5%	220μF
DKM30G-12N		25mA	1400mA	±12V	±0~1250mA	89%	*150μF
DKM30G-15N		25mA	1400mA	±15V	±0~1000mA	89%	*100μF

* For each output

SPECIFICATION				
INPUT	VOLTAGE RANGE		F: 9~36Vdc , G: 18~75Vdc	
	FILTER		Pi network	
	PROTECTION		Fuse recommended (24Vin : 6A Slow-Blow type, 48Vin: 4A Slow-Blow)	
OUTPUT	VOLTAGE ACCURACY		±2% max.	
	RATED POWER		30W	
	RIPPLE & NOISE Note.2		150mVp-p max.	
	LINE REGULATION Note.3		±0.2%	
	LOAD REGULATION Note.4		±0.5%	
	SWITCHING FREQUENCY (Typ.)		380KHz	
	EXTERNAL TRIM ADJ. RANGE (Typ.)		±10% (Single output model only)	
PROTECTION	SHORT CIRCUIT		Protection type : Continuous, automatic recovery	
	OVERLOAD		110 ~ 230%	
			Protection type : Recovers automatically after fault condition is removed	
	OVER VOLTAGE	INPUT	Protection type : Shutdown output voltage (F type : 40Vdc typ. , G type: 86Vdc typ.)	
		OUTPUT	Clamp by TVS diodes	
FUNCTION	REMOTE CONTROL		Power ON: R.C. ~ -Vin >2.5~5Vdc or open circuit ; Power OFF: R.C. ~ -Vin <1Vdc or short	
ENVIRONMENT	COOLING		Free-air convection	
	WORKING TEMP.		-40 ~ +90℃ (Refer to "Derating Curve")	
	CASE TEMPERATURE		+110℃ max.	
	WORKING HUMIDITY		5% ~ 95% RH non-condensing	
	STORAGE TEMP., HUMIDITY		-55 ~ +125℃, 10 ~ 95% RH non-condensing	
	TEMP. COEFFICIENT		±0.05% / ℃	
	SOLDERING TEMPERATURE		1.5mm from case of 3 ~ 5 sec./265℃ max.	
	VIBRATION		10 ~ 500Hz, 2G 10min./1cycle, period for 60min. each along X, Y, Z axes	
SAFETY & EMC (Note.5)	SAFETY STANDARDS		EAC TP TC 020/2011 approved	
	WITHSTAND VOLTAGE		I/P-O/P:3KVDC	
	ISOLATION RESISTANCE		I/P-O/P:100M Ohms / 500VDC / 25℃/ 70% RH	
	ISOLATION CAPACITANCE (Typ.)		1000pF	
	EMC EMISSION	**Parameter**	**Standard**	**Test Level / Note**
		Conducted	BS EN/EN55032(CISPR32)	N/A
		Radiated	BS EN/EN55032(CISPR32)	Class A
	EMC IMMUNITY	**Parameter**	**Standard**	**Test Level / Note**
		ESD	BS EN/EN61000-4-2	±4KV contact
		Radiated Susceptibility	BS EN/EN61000-4-3	3V/m
		EFT/Bursts	BS EN/EN61000-4-4	Level 1, 0.5KV
		Surge	BS EN/EN61000-4-5	±0.5KV Line-Line
		Conducted	BS EN/EN61000-4-6	3V(e.m.f.)
OTHERS	MTBF		>250Khrs MIL-HDBK-217F(25℃)	
	DIMENSION (L*W*H)		50.8*25.4*11.2mm (2*1*0.44 inch)	
	CASE MATERIAL		Six-side shielded case	
	PACKING		31g ; 10pcs/per tube, 400pcs/40 tube/per carton	

NOTE

1.All parameters are specified at normal input(F:12Vdc, G:24Vdc), rated load, 25℃ 70% RH ambient.
2.Ripple & noise are measured at 20MHz by using a 12" twisted pair terminated with a 0.1μf & 47μf capacitor.
3.Line regulation is measured from low line to high line at rated load.
4.Load regulation is measured from 0% to 100% rated load.
5.The final equipment must be re-confirm that it still meet EMC directives. For guidance on how to perform these EMC tests, please refer to "EMI testing of component power supplies."(as available on http://www.meanwell.com)
※ Product Liability Disclaimer ： For detailed information, please refer to https://www.meanwell.com/serviceDisclaimer.aspx

External Output Trimming

In order to trim the voltage up or down one needs to connect the trim resistor either between the trim pin and -Vo for trim-up and between trim pin and +Vo for trim-down. This is shown in Figures 1 and 2:

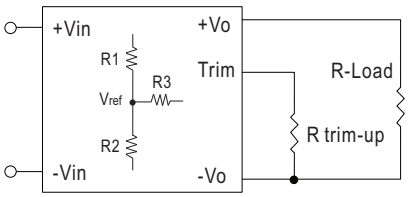

Figure 1. Trim-up Voltage Setup

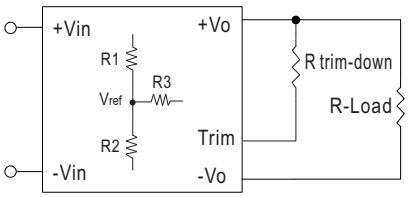

Figure 2. Trim-down Voltage Setup

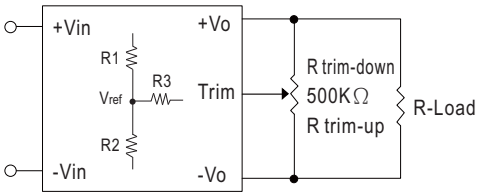

Figure 3. Trim-Connections

Table 1 – Trim up and Trim down Resistor Values

Model Number	Vo,nom (V)	Vref (V)	R1 (KΩ)	R2 (KΩ)	R3 (KΩ)
SKM30F-05N SKM30G-05N	5	2.5	1	1	3.6
SKM30F-12N SKM30G-12N	12	2.5	3.83	1	7.5
SKM30F-15N SKM30G-15N	15	2.5	7.5	1.5	11

1. The value of **$R_{trim-up}$** defined as:

$$A = \left(\frac{V_{ref}}{V_o' - V_{ref}}\right) \times R1$$

$$R_{trim-up} = \left(\frac{A \times R2}{R2 - A}\right) - R3$$

Where

$R_{trim-up}$ is the external resistor in Kohm.

$V_{o,nom}$ is the nominal output voltage.

V_o' is the desired output voltage.

R1, R2, R3 and V_{ref} are internal to the unit and defined in Table 1.

For example, to trim-up the output voltage of 12V model (SKM30F-12N) by 10% to 13.2V, $R_{trim-up}$ is calculated as follows:

$V_{o,nom}$ = 12V

V_o' = 13.2V

R1 = 3.83 KΩ

R2 = 1 KΩ

R3 = 7.5 KΩ

Vref = 2.5V

$$A = \left(\frac{2.5}{13.2 - 2.5}\right) \times 3.83 = 0.894$$

$$R_{trim-up} = \left(\frac{0.894 \times 1}{1 - 0.894}\right) - 7.5$$

$$= \left(\frac{0.894}{0.106}\right) - 7.5$$

$$= 0.933K\Omega$$

2. The value of **$R_{trim-down}$** defined as:

$$A = \left(\frac{V_o' - V_{ref}}{V_{ref}}\right) \times R2$$

$$R_{trim-down} = \left(\frac{A \times R1}{R1 - A}\right) - R3$$

Where

$R_{trim-down}$ is the external resistor in Kohm.

$V_{o,nom}$ is the nominal output voltage.

V_o' is the desired output voltage.

R1, R2, R3 and V_{ref} are internal to the unit and defined in Table 1.

For example, to trim-down the output voltage of 12V model (SKM30F-12N) by 10% to 10.8V, $R_{trim-down}$ is calculated as follows:

$V_{o,nom}$ = 12V

V_o' = 10.8V

R1 = 3.83 KΩ

R2 = 1 KΩ

R3 = 7.5 KΩ

Vref = 2.5V

$$A = \left(\frac{10.8 - 2.5}{2.5}\right) \times 1 = 3.32$$

$$R_{trim-down} = \left(\frac{3.32 \times 3.83}{3.83 - 3.32}\right) - 7.5$$

$$= \left(\frac{12.715}{0.15}\right) - 7.5$$

$$= 17.431K\Omega$$

■ Derating Curve

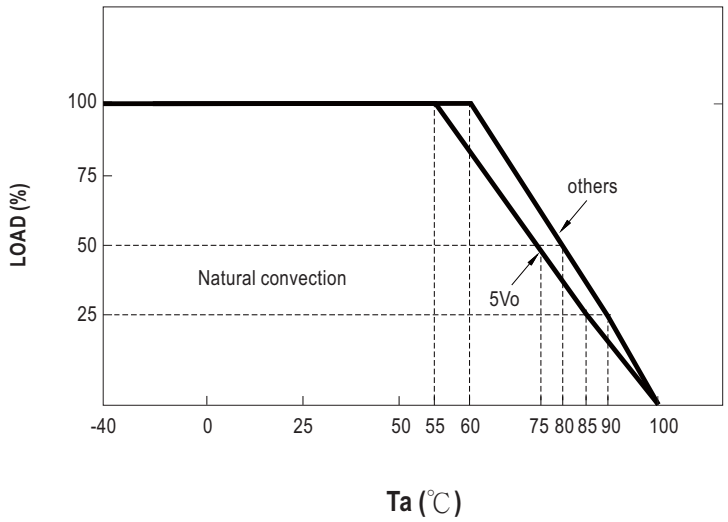

■ EMC Suggestion Circuit

※ Comply to BS EN/EN55032 Class A emission without additional componets are as below:

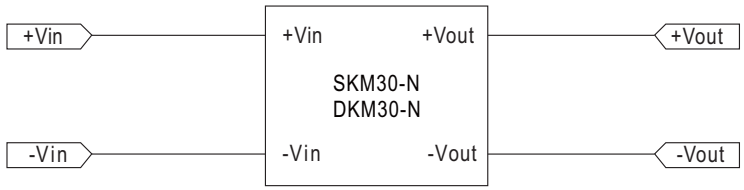

※ Required external componets to meet BS EN/EN55032 Class B emission are as below:

Model No.	BS EN/EN55032 Class B					
	F1	C1	C2	C3	C4	L1
SKM30F-N DKM30F-N	Suggest 6A Slow-Blow Type	47μF/100V	3.3μF/50V 1210 MLCC	1000PF/5KV MLCC	1000PF/5KV MLCC	325μH Common Choke
SKM30G-N DKM30G-N	Suggest 4A Slow-Blow Type	47μF/100V	2.2μF/100V 1210 MLCC	1000PF/5KV MLCC	1000PF/5KV MLCC	325μH Common Choke

Note : Choose according to actual input current for F1

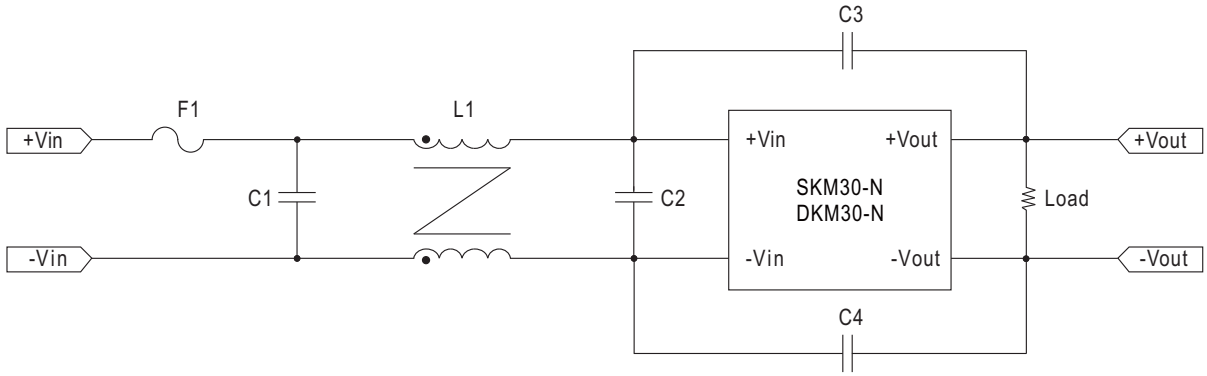

■ Mechanical Specification

Unit:mm(inch)

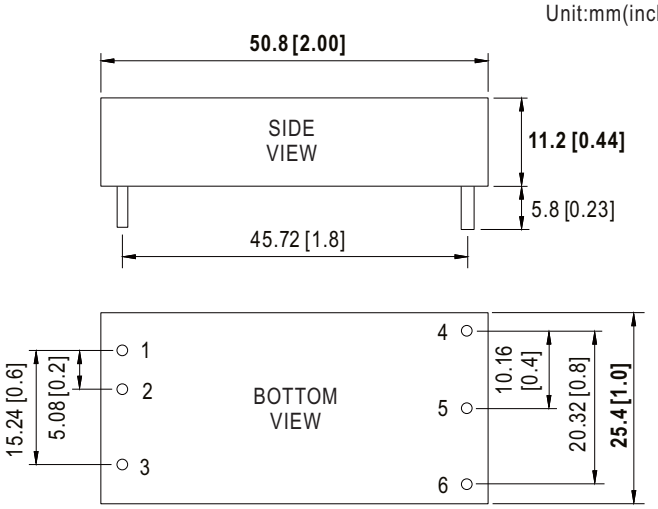

Note : Pin size tolerance 1 ϕ ±0.1mm

■ Pin Configuration

Pin-Out		
Pin No.	SKM30-N (Single output)	DKM30-N (Dual output)
1	+Vin	+Vin
2	-Vin	-Vin
3	Remote ON/OFF	Remote ON/OFF
4	+Vout	+Vout
5	-Vout	Common
6	Trim	-Vout

■ Packing

Standard Tube Packing	MPQ Per Tube (PCS)	One Tube G.W.	Max. Q'TY/ Carton(PCS)	One Carton G.W.
Unit : mm 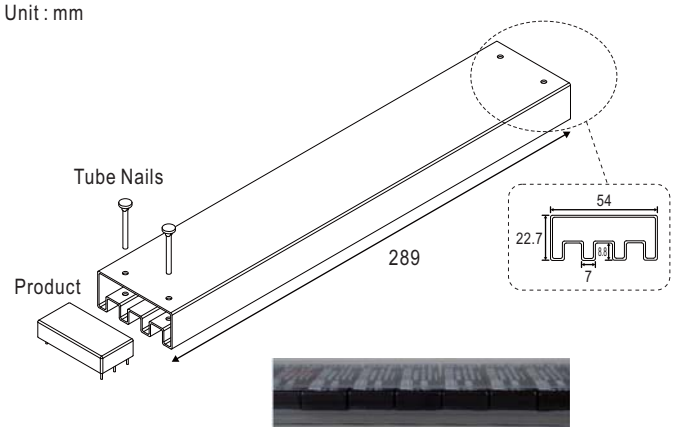 Tube pattern 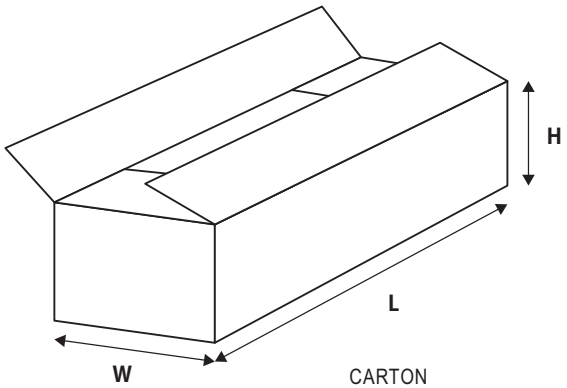 CARTON L620 x W230 x H230	10	398g	400	16.72Kg

■ Installation Manual

Please refer to : http://www.meanwell.com/manual.html